Exercise 3: Packet Inspection

Step 1: Query Strings vs. Route Parameters in Node-RED

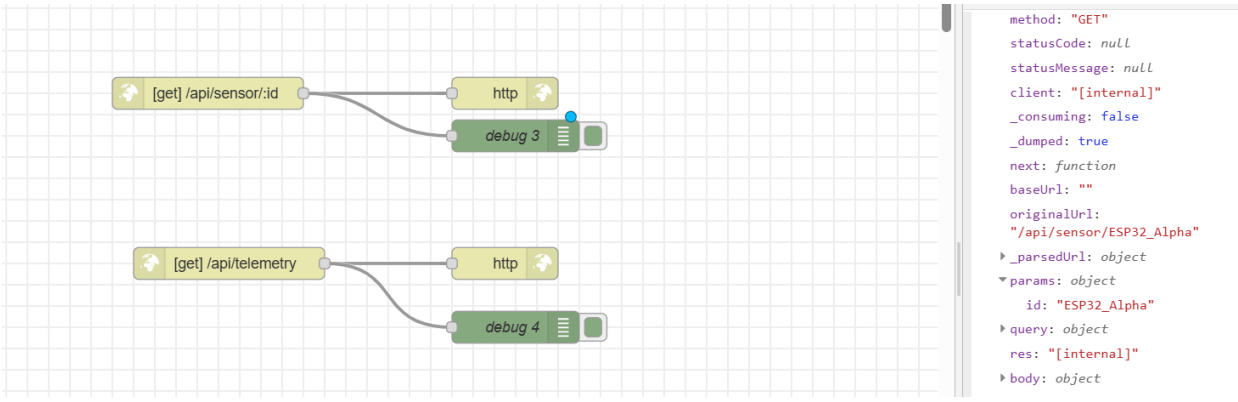

Figure 1: This shows the route parameter was captured correctly.

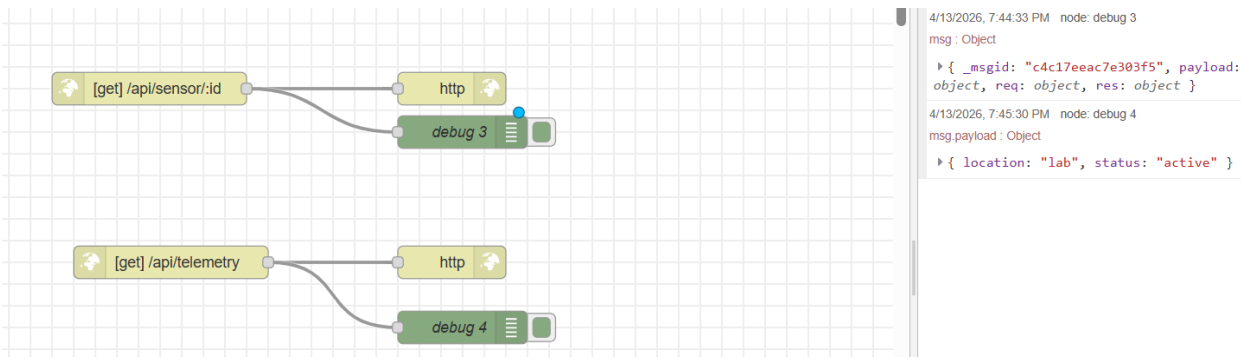

Figure 2: This shows that query strings are parsed into a clean object.

So, the main idea of Step 1 is to show that route parameters are for specific IDs, while query strings are for optional filtering or settings.

Step 2: The Power of HTTP Headers (Media & Authentication)

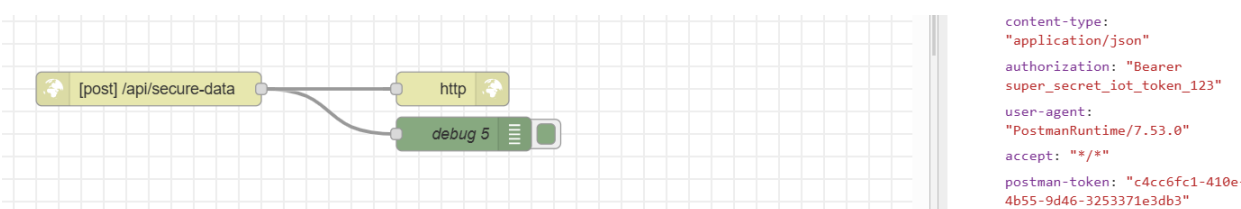

Figure 3: Both the content-type and authorization headers are inside the request.

So, Step 2 shows that headers are important because they describe the data format and help protect the API with authentication.

Step 3: Deep Packet Inspection with Wireshark

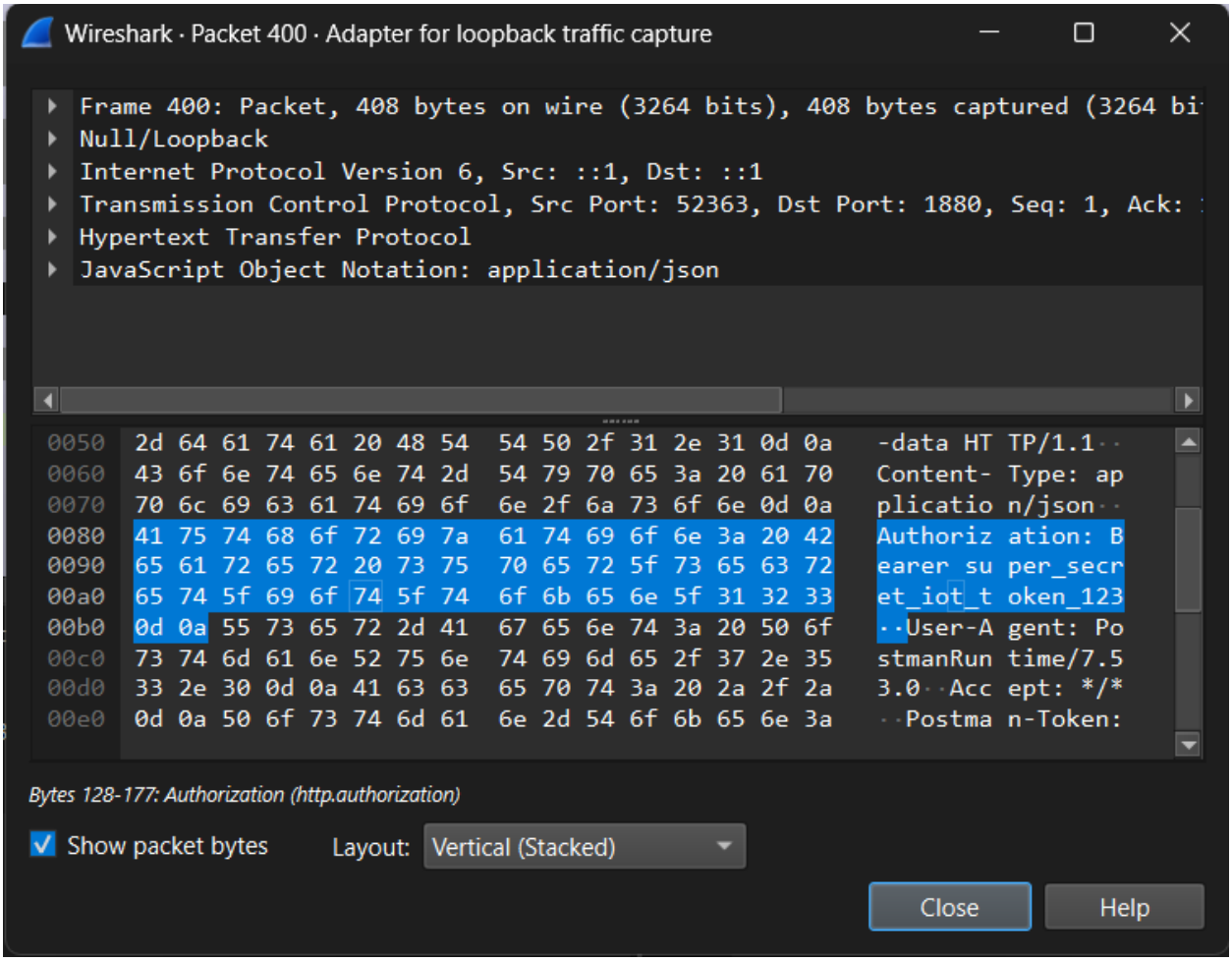

Figure 3: Confirm that the Authorization header and JSON payload are visible in plaintext.

When I clicked the packet and expanded the HTTP section, I could read the headers and body in plain text. I saw the Authorization token and the JSON payload clearly, which shows that raw HTTP is not encrypted. So, Step 3 demonstrates how Wireshark can inspect packets and why HTTPS is important for security, especially for IoT systems.

Step 4: Analytical Modifications & Network Comparison

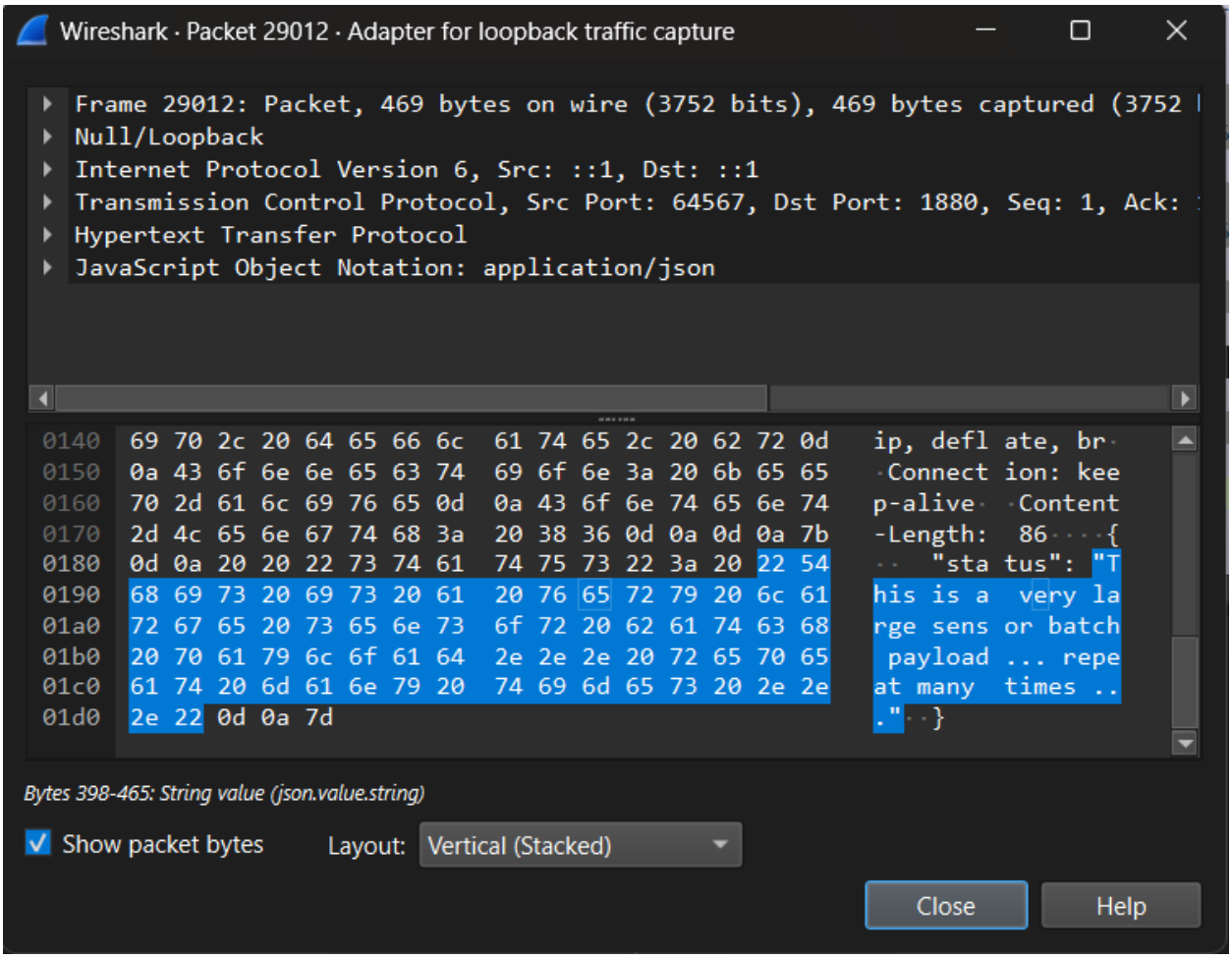

So, Step 4 proves that bigger payloads increase the packet size, and changing the content type changes how the server interprets the data. It also helps show how headers and body size affect HTTP traffic.

Conclusion

This exercise demonstrated the difference between route parameters and query strings in Node-RED, showed how HTTP headers define content format and authentication, and proved that Wireshark can inspect raw HTTP traffic in plaintext. The experiment also showed that larger payloads increase transmission size and that header changes are visible directly in the packet capture.